MOTOVARIO® 에이전트
HEART OF MOTION

REDUCER SPEC	
MODEL	BA72
SERVICE FACTOR	1.8
RATIO	27.45
OUTPUT [rpm]	63.8
OUTPUT TORQUE [Nm]	213
WEIGHT [kg]	15.6

MOTOR SPEC	
MODEL	TPA/90B5 220/380V
POWER [kW]	1.5
POLE, PHASE	4P, 3PHASE
INPUT [rpm]	1750
BRAKE	NO
WEIGHT [kg]	19.7

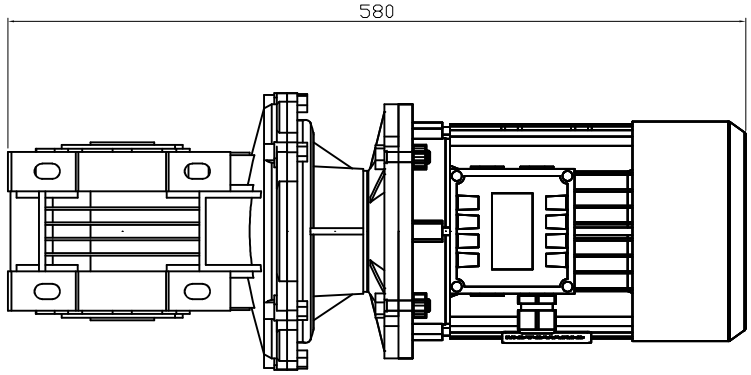

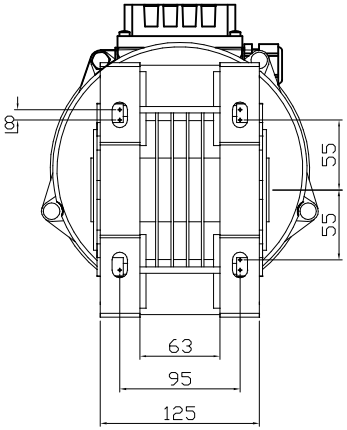

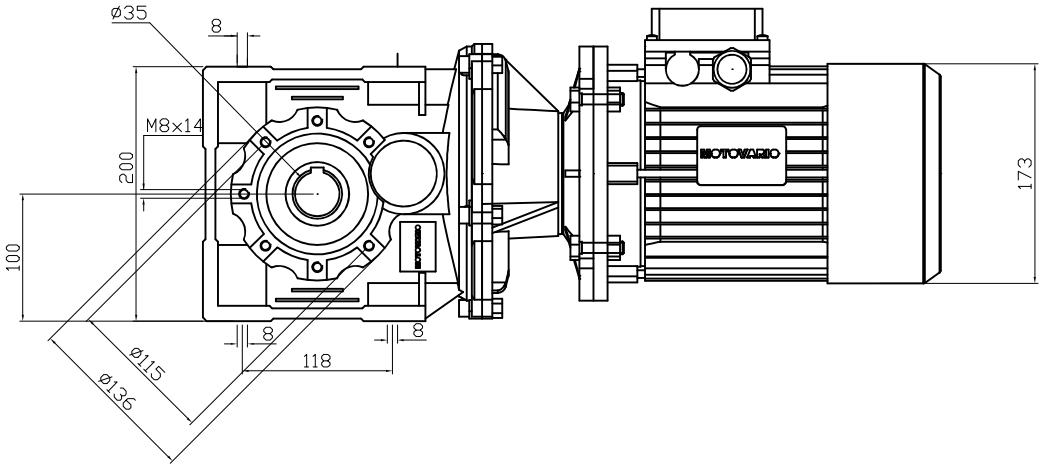

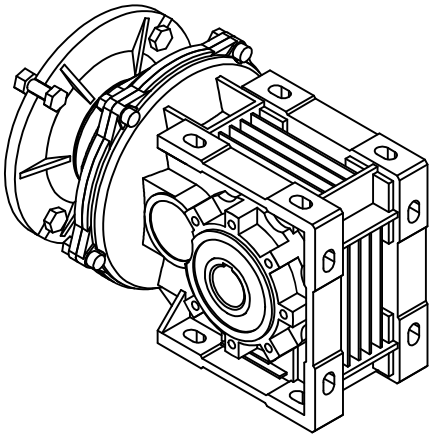

(주)한국체인모터
Tel. 032-815-8888 Fax. 815-8020
www.bcmfa.com

PROJECT		MOTOVARIO					
DRAWN	SEO Y.S	DATE		REV	A	SCALE	1:1
CHECKED	KIM J.S	DATE		UNIT	MM	PAGE	-
APPROVED	LEE J.Y	DATE					