ABR115A - 025 - S2 - P2 / MITSUBISHI HG-SR152

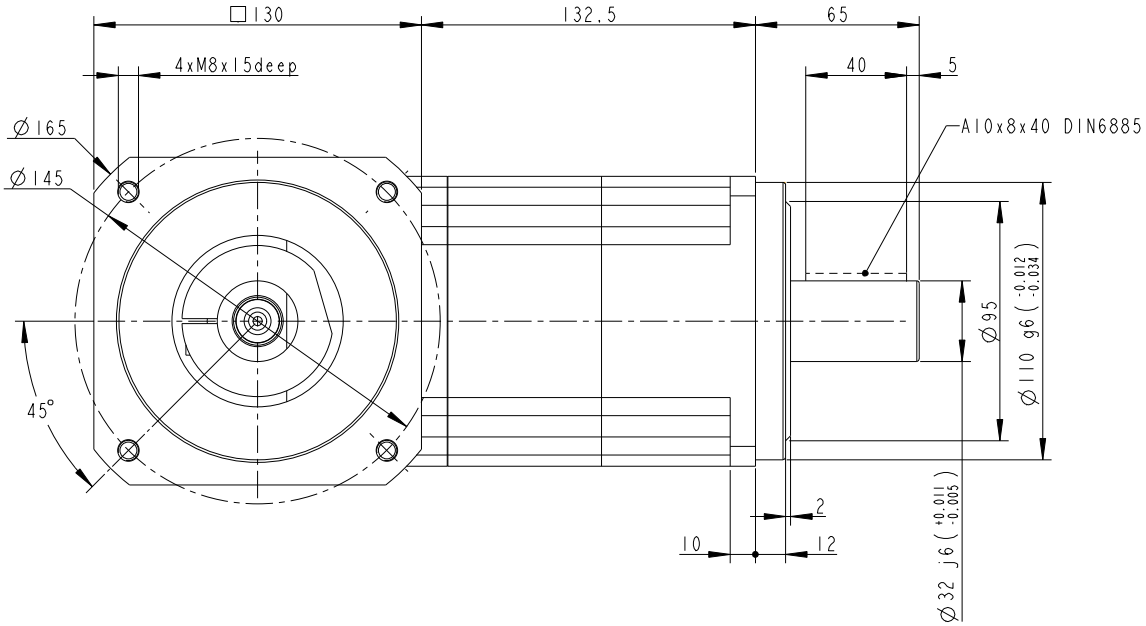

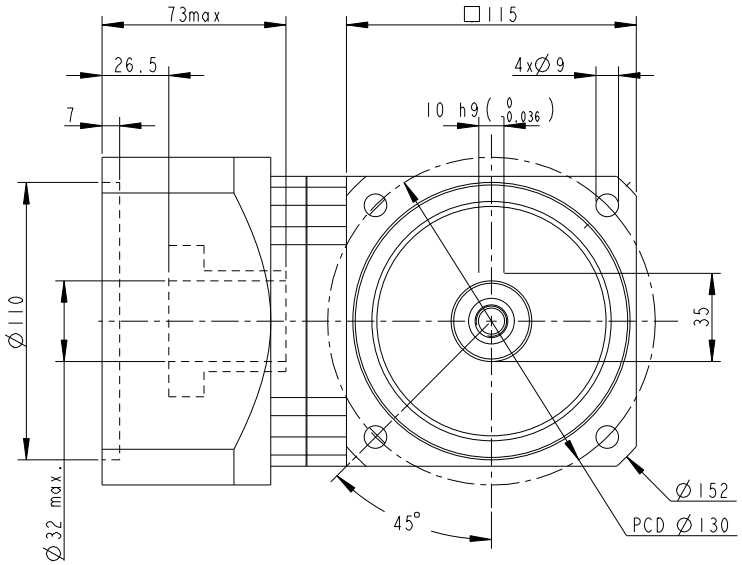

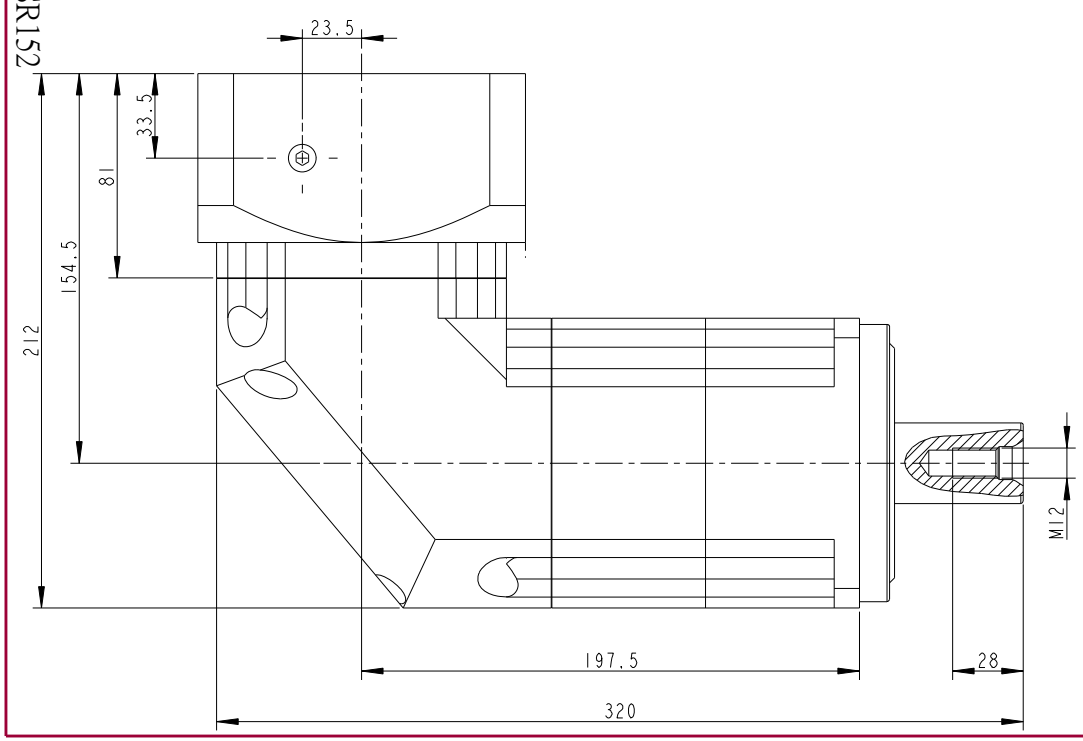

PART NO. ABR115A2-P0401400706 ABR115A-2, AD-W115-M30-6		APEX DYNAMICS, INC.
APPROVALS	DATE	TITLE ABR115A 2 STAGES, RATIO= 25~200 AND MOTOR FLANGE MOUNTING
DRAWN Cindy		DWG NO. ABR115A2-P0401400706
CHECKED		
APPROVED		SIZE A1 / SCALE 1:1 / REV 2.0