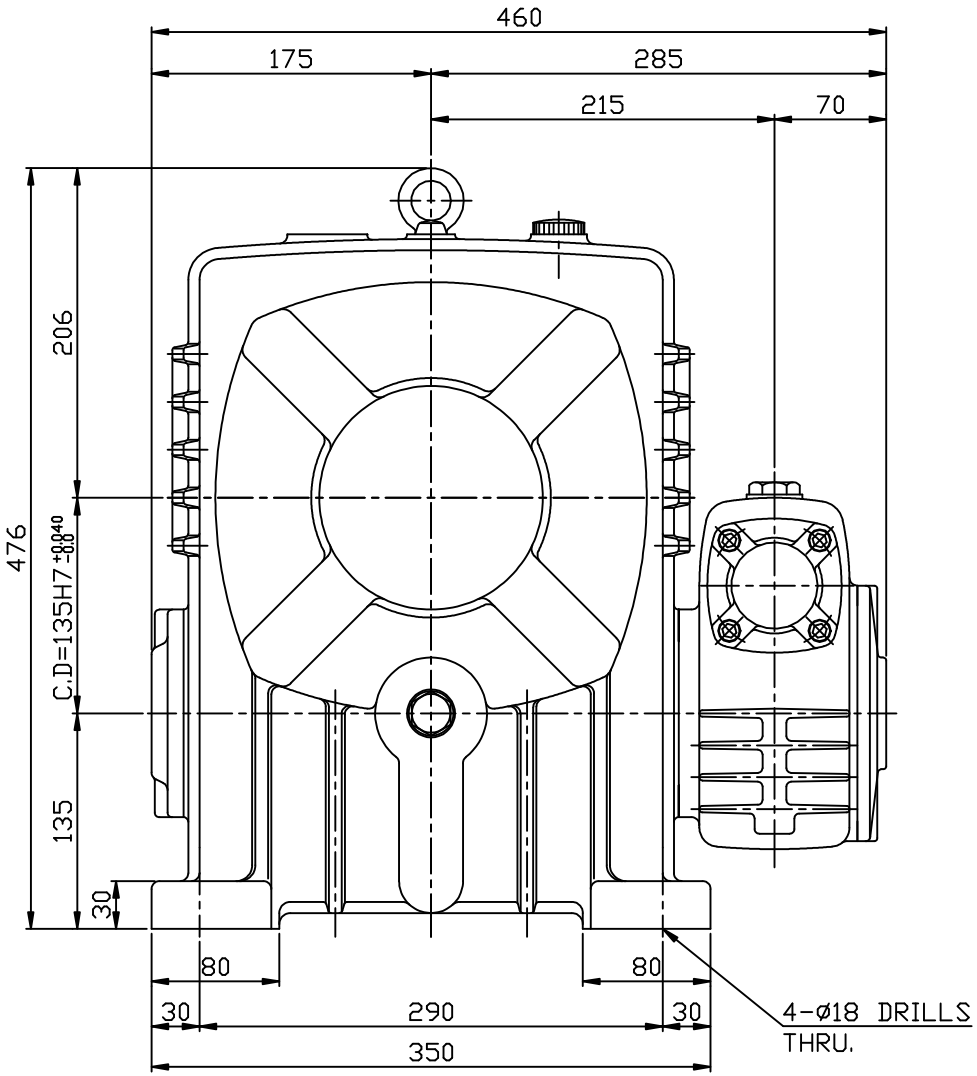

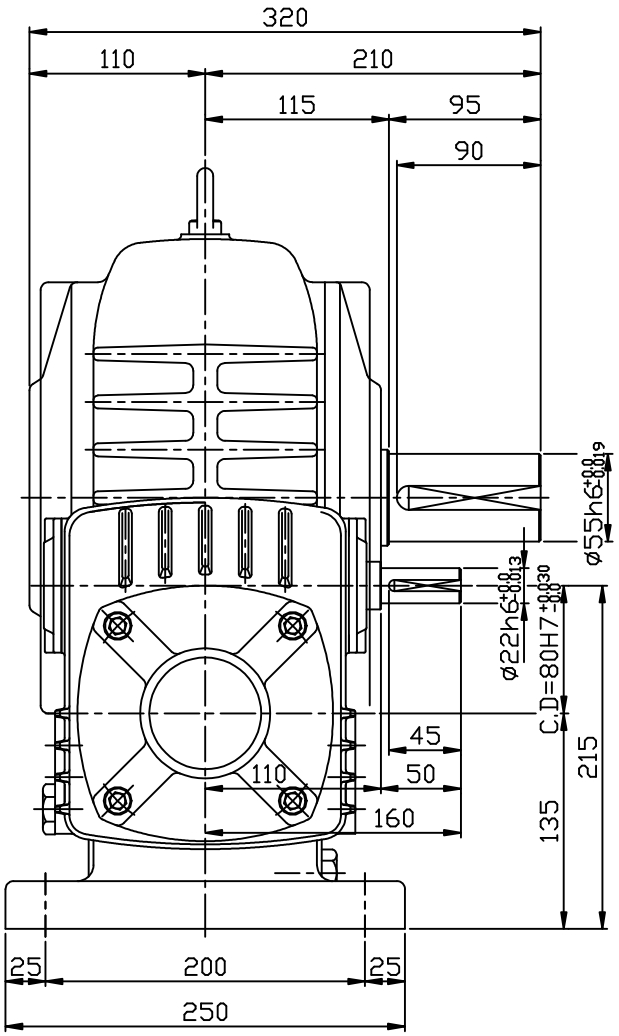

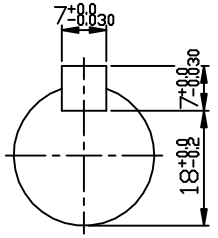

INPUT SHAFT

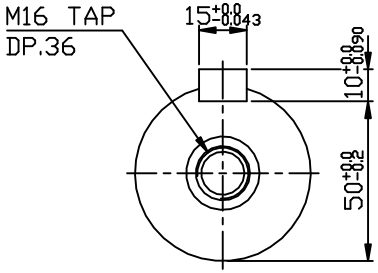

OUTPUT SHAFT

M5*0.8
M6* 1
M8*1.25
M10*1.5
M12*1.75
M16* 2
M18*2.5
M20*2.5
M22*2.5
M24*3

NO.	REVISION	DATE	NAME

NO	DESCRIPTION	MAT'S	Q'TY	SIZE

	DATE	NAME
DESIGN	1999.5.11	D.W,SA
CHECK	1999.5.11	H.G,PARK
APPROV	1999.5.11	M.C,HUR

SAMYANG
REDUCTION GEAR CO., LTD.

TITLE
OUTLINE DWG.
MAX21 WORM REDUCER DWB135
i=1/200~1/900 C-TYPE

SCALE N/S

DWB135_C

SHEET /