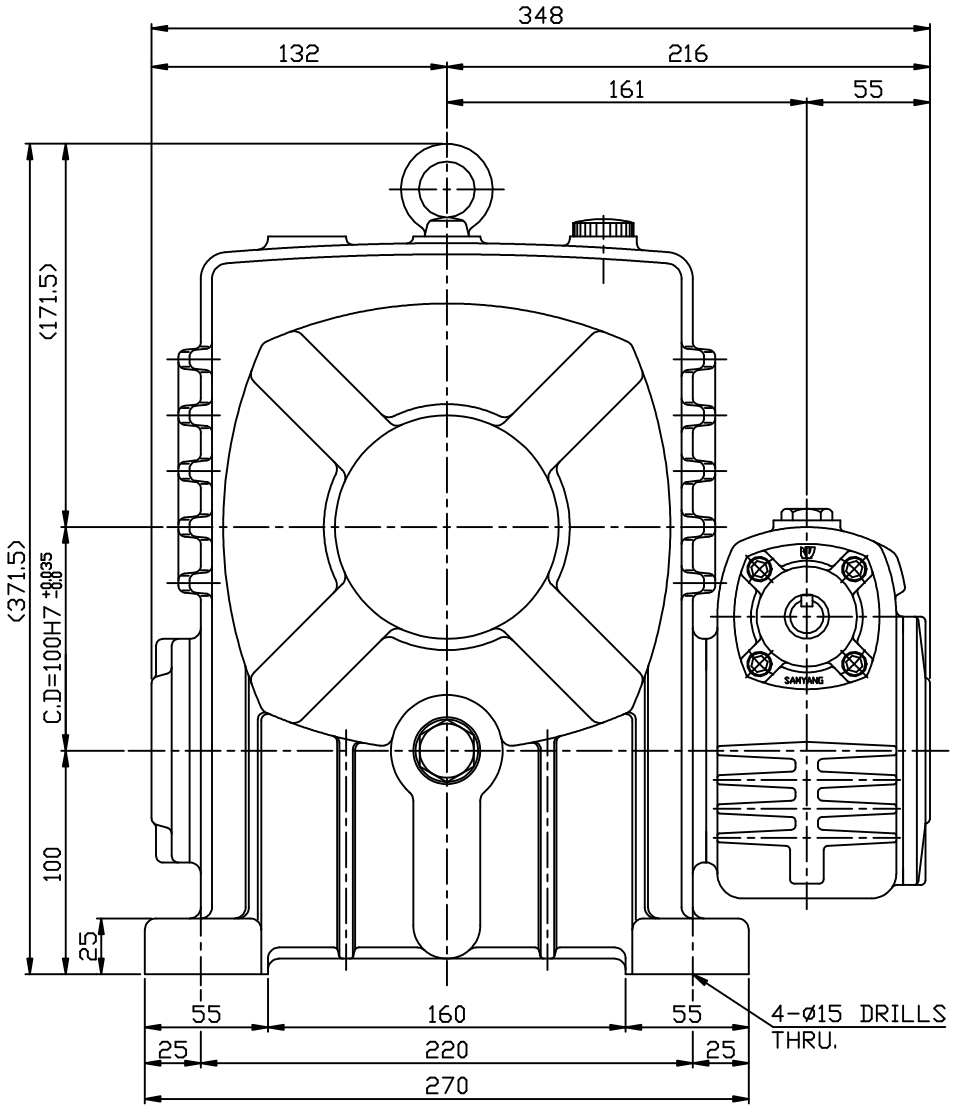

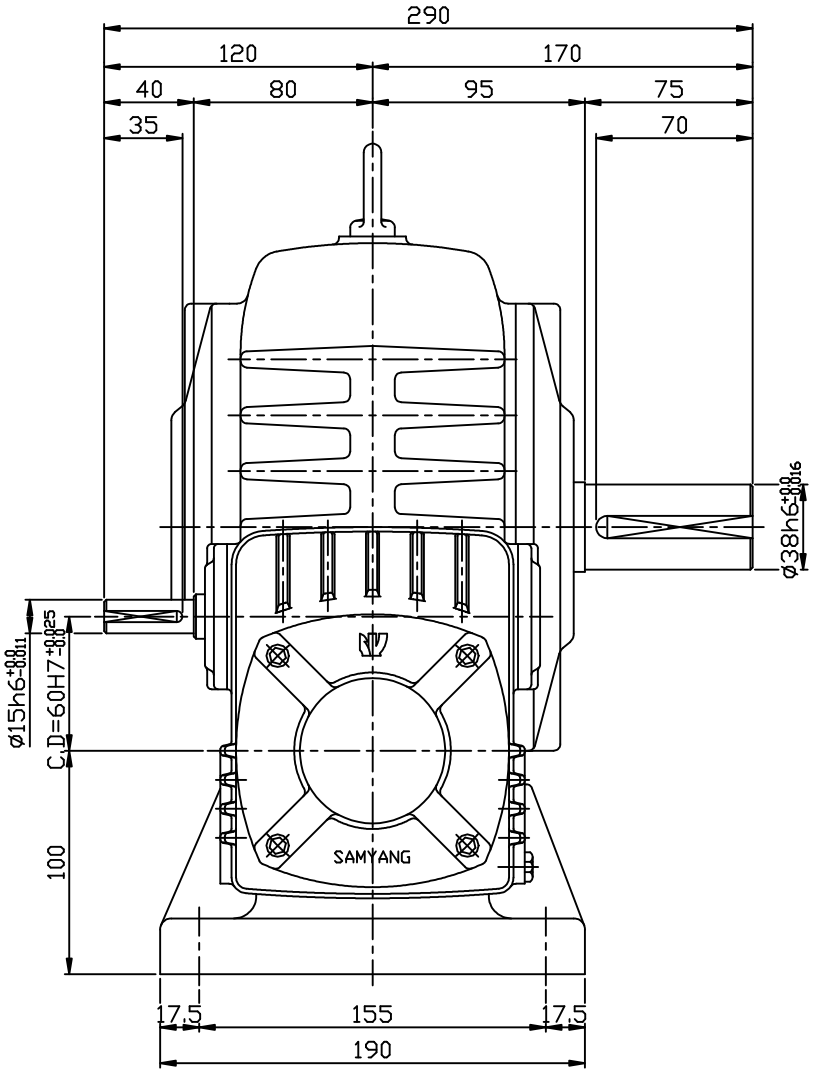

M5*0.8
M6* 1
M8*1.25
M10*1.5
M12*1.75
M16* 2
M18*2.5
M20*2.5
M22*2.5
M24*3

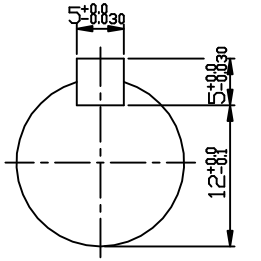

INPUT SHAFT

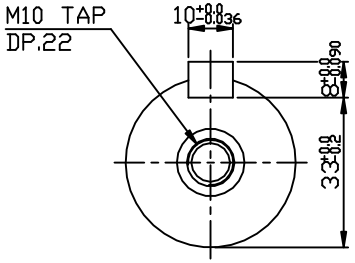

OUTPUT SHAFT

NO.	REVISION	DATE	NAME

NO	DESCRIPTION	MAT'S	Q'TY	SIZE

	DATE	NAME
DESIGN	1999.5.11	D.W,SA
CHECK	1999.5.11	H.G,PARK
APPROV	1999.5.11	M.C,HUR

SAMYANG
REDUCTION GEAR CO., LTD.

TITLE: OUTLINE DWG.
MAX21 WORM REDUCER DWB100
i=1/200~1/900 A-TYPE

DWB100_A

SCALE: N/S

SHEET: /